LLOYD INDUSTRIES INC.

WWW.FIREDAMPER.COM

AIR CONTROL DAMPER (AIR FOIL)

MODELS:
AC10-AF (PARALLEL BLADE)
AC20-AF (OPPOSED BLADE)

APPLICATION

The AC10-AF & AC20-AF are an ultra low leakage, galvanized steel damper with aluminum airfoil blades for high velocity and medium to high pressure HVAC systems. They provide ultra-low leakage and unsurpassed pressure drop performance. The AC10-AF & AC20-AF are designed for reducing pressure drop and less noise generation.

STANDARD CONSTRUCTION

FRAME:	5in. X 1in. Channel 16 Ga. (1.5mm) galvanized steel (Optional: 16 Ga. Aluminum)
BLADES:	Aluminum air foil (Opposed or Parallel) TPV blade seals Stainless steel jamb seals (Opposed or Parallel)
BEARINGS:	Non-metallic celcon
AXLES:	1/2 Sq zinc plated steel stud
LINKAGE:	Concealed in frame 10 Ga. zinc plated steel
SHAFT:	2-1/2" Extended shaft Fixed 1/2 inch diameter zinc plated steel

BLADE OPERATION:

PARALLEL BLADE

OPPOSED BLADE

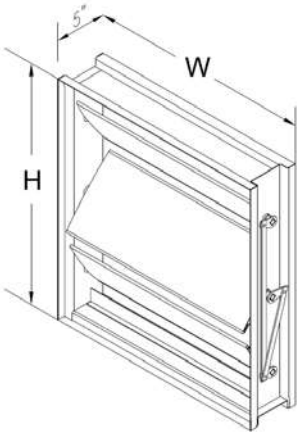

OPTIONAL COMPONENTS

- Stainless steel jamb seals
- Bronze bearings
- Sleeves-manual, electric, pneumatic
- Actuators-manual, electric, pneumatic
- Removable 8" extended shaft
- 1/2" Dia. shaft extending 7-1/2 beyond the air control frame requires 1" or 2" bearing brack-

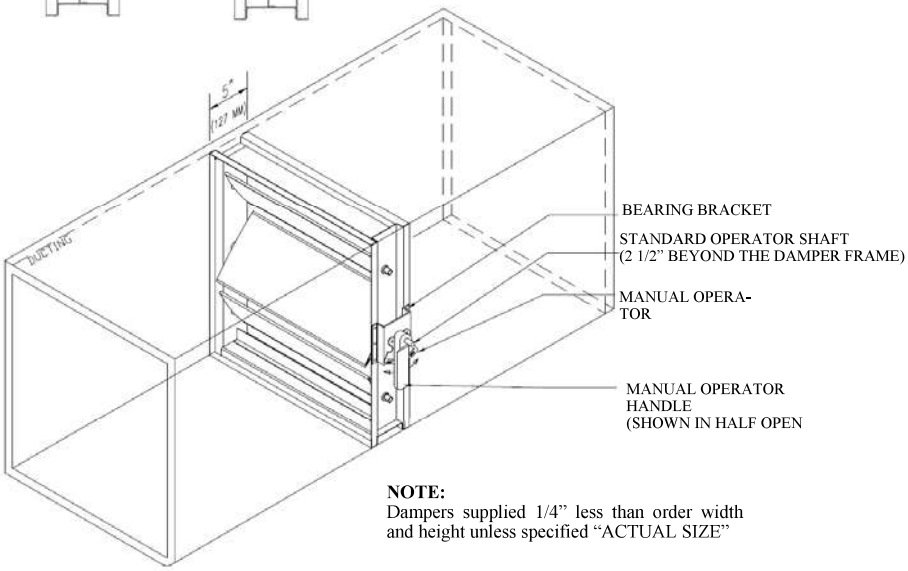

NOTE:
Dampers supplied 1/4" less than order width and height unless specified "ACTUAL SIZE"

Model	Single Section		Multiple Sections
	Minimum Size (WxH)	Maximum Size (WxH)	Maximum Size (WxH)
AC10-AF	6X6	72x72	UNLIMITED
AC20-AF	6x11	72x72	

231 Commerce Dr. Montgomeryville, PA 18936
Tel: 215-412-4445 Fax: 215-412-4409
Email: lloydind@firedamper.com

138 Industrial Loop West, Orange Park, FL 32073
Tel: 904-541-1655 Fax: 904-541-1657
Email: lloydind1@firedamper.com

B1, 4/F., Luen Ming Hing Factory Building
36 Mok Cheong St.,
To Kwa Wan, Kowloon, H. K.
Tel: 852-2760-4188 Fax: 852-2760-4177
Email: tatanlexyim@lloydasia.com

Website: www.firedamper.com

*ALL STATED SPECIFICATIONS ARE SUBJECT TO UPDATE WITHOUT NOTICE OR OBLIGATION.

Lloyd Industries Inc. 2017

AIR CONTROL DAMPER (AIR FOIL)

MODELS:
AC10-AF (PARALLEL BLADE)
AC20-AF (OPPOSED BLADE)

AMCA Certified Leakage Data

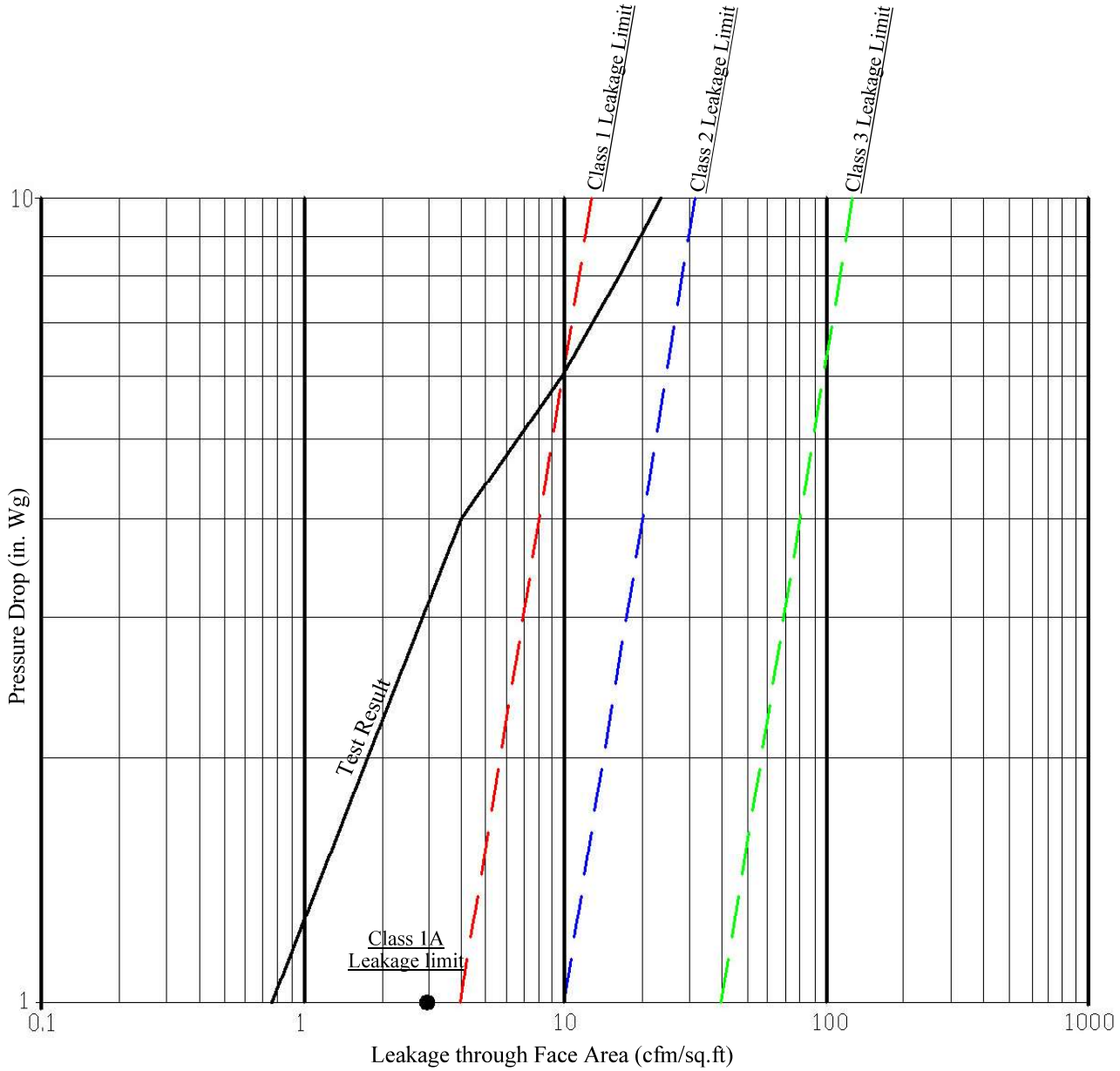

AC10AF/AC20AF	Leakage Class		
Damper Width	1 in. Wg	4 in. Wg	6 in. Wg
48"	1A	1	1

Torque: 9.0 in.lb/sq.ft applied to close and seat the damper.

Lloyd Industries certifies that the AC10-AF and AC20-AF herein are licensed to bear the AMCA Seal. The ratings shown are based on the tests and procedures performed in accordance with AMCA publication 511 and comply with the requirements of the AMCA Certified Ratings Program. The AMCA International Certified Rating Seal applies to Air Performance and Air Leakage.

231 Commerce Dr. Montgomeryville, PA 18936
Tel: 215-412-4445 Fax: 215-412-4409
Email: lloydind@firedamper.com

138 Industrial Loop West, Orange Park, FL 32073
Tel: 904-541-1655 Fax: 904-541-1657
Email: lloydind1@firedamper.com

B1, 4/F., Luen Ming Hing Factory Building
36 Mok Cheong St.,
To Kwa Wan, Kowloon, H. K.
Tel: 852-2760-4188 Fax: 852-2760-4177
Email: tatanlexyim@lloydasia.com

Website: www.firedamper.com

*ALL STATED SPECIFICATIONS ARE SUBJECT TO UPDATE WITHOUT NOTICE OR OBLIGATION.

Lloyd Industries Inc. 2017

SLEEVES AIR CONTROL DAMPERS

SLEEVE TRANSITION DIMENSIONAL INFORMATION

STANDARD SLEEVES

Air Control dampers can be supplied with factory mounted type "A " sleeves for standard system ducting unless otherwise specified.

Standard "A" sleeve ordering information:

To determine the standard sleeve length

1. Establish damper width x height.
2. Determine the actuator type, model, and mounting type.
3. Establish the minimum actuator mounting distance from the mounting diagrams.
4. Determine the sleeve distance "M" opposite to the actuator side of the damper.
5. Add the actuator mounting distance to the "M" distance and the 5.00" damper thickness.
6. Integral flanges 1-1/2" wide can be provided on sleeves when specified.

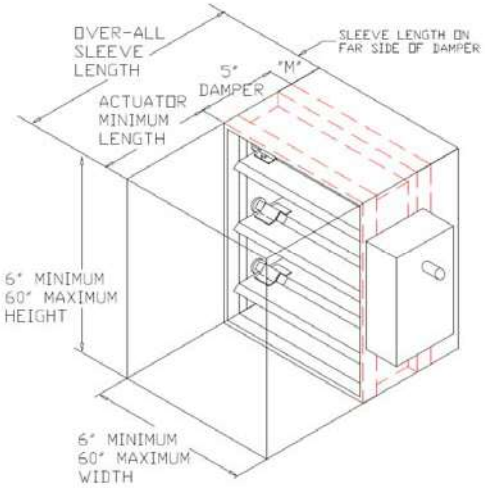

Standard sleeve
Type "A"

SLEEVE TRANSITIONS

Air control dampers can be supplied with factory mounted sleeves to transition to round, square, rectangular, oval, or special system ducting.
For sleeve length:
Use the standard "A" sleeve length calculation

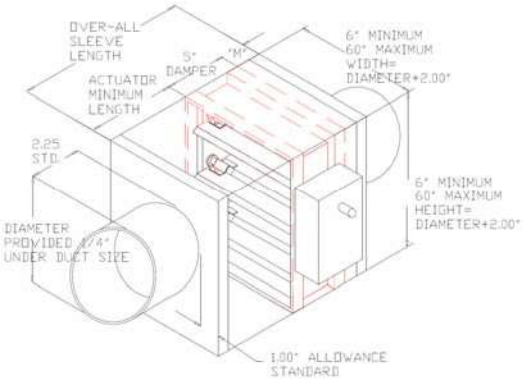

Type "CR"- Round
Specify the round ducting diameter.
(The actual damper frame will be +2.00"W x +2.00H)

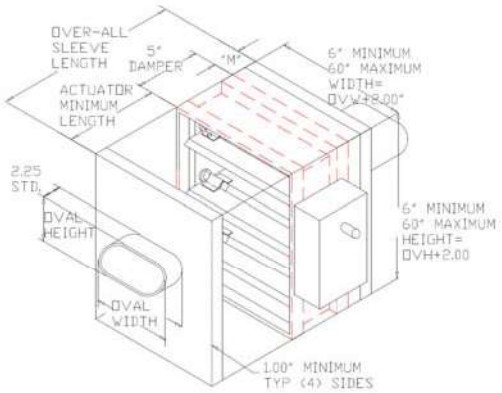

Type "CO"- Oval
Specify the oval width x oval height
(The actual damper frame will be +2.00"W x +2.00H)

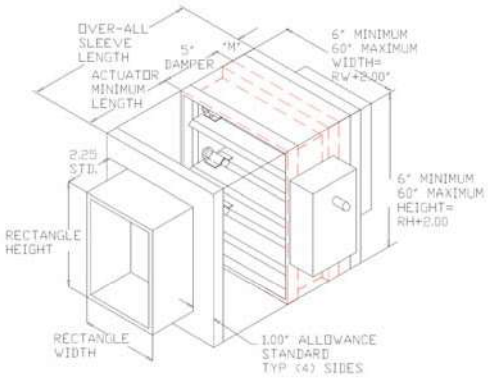

Type "C"- Rectangle
Specify the rectangle width x rectangle height
(The actual damper frame will be +2.00"W x +2.00H)

When ordering specify:
W x H x L x Gauge.
And distance "M" when "M" is not specified dampers will be centered in sleeve.

231 Commerce Dr. Montgomeryville, PA 18936
Tel: 215-412-4445 Fax: 215-412-4409
Email: lloydind@firedamper.com

138 Industrial Loop West, Orange Park, FL 32073
Tel: 904-541-1655 Fax: 904-541-1657
Email: lloydind1@firedamper.com

B1, 4/F., Luen Ming Hing Factory Building
36 Mok Cheong St.,
To Kwa Wan, Kowloon, H. K.
Tel: 852-2760-4188 Fax: 852-2760-4177
Email: tatanlexyim@lloydasia.com

Website: www.firedamper.com

*ALL STATED SPECIFICATIONS ARE SUBJECT TO UPDATE WITHOUT NOTICE OR OBLIGATION.

Lloyd Industries Inc. 2017