LLOYD INDUSTRIES INC.

WWW.FIREDAMPER.COM

EXTRUDED ALUMINUM LOUVER

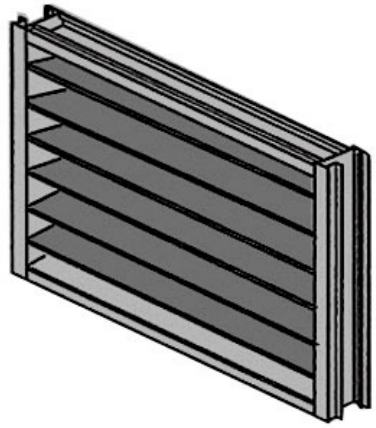

MODEL: 4-SRCF COMBO

COMBINATION INTAKE/EXHAUST

APPLICATION

The 4-SRCF COMBO Stationary Louver is 4” deep with a Channel Frame. That is designed for the protection of higher air intake and exhaust velocities in building exterior walls. The louver structure incorporates stationary 36º and 90º blades. The 4-SRCF COMBO is AMCA STD 500 approved

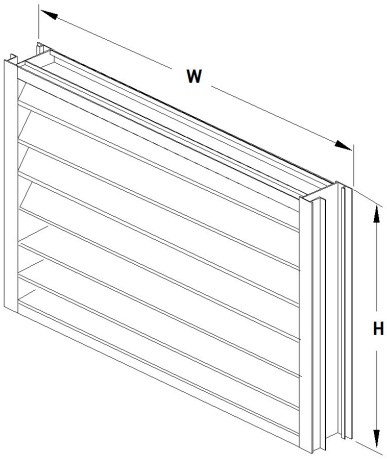

SPECIFICATIONS

Frame:	0.081 thick extruded aluminum 6063-T5 mill finish
Blade:	0.081 thick extruded aluminum 6063-T5 mill finish
Blade Spacing:	Approximately 3-1/4” center to center (except at head and sills)
Fasteners:	10” x 3/4” tek screws
Blade Angle:	36º and 90º
Min. Height:	12”
Max. Single Sec.:	Consult factory for maximum size
Screen:	Bird screen 1/2”×1/2” galvanized steel

OPTIONS

Insect Screen 1/16” x 1/16” mesh aluminum

Bird Screen 1/2” x 1/2” aluminum

Finish:	Clear Anodized
	Bronze Anodized
	Powder Coat Paint
	Baked Enamel Paint

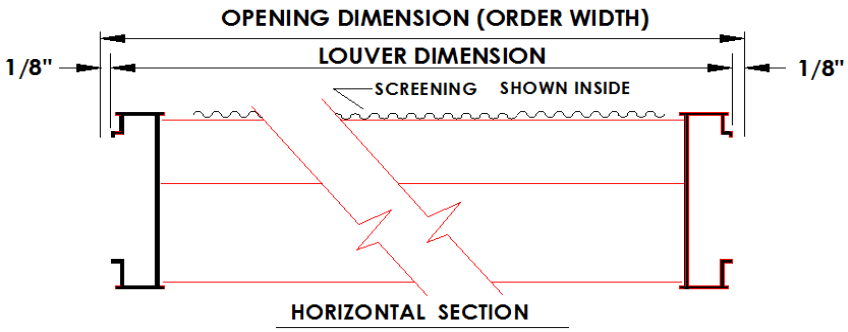

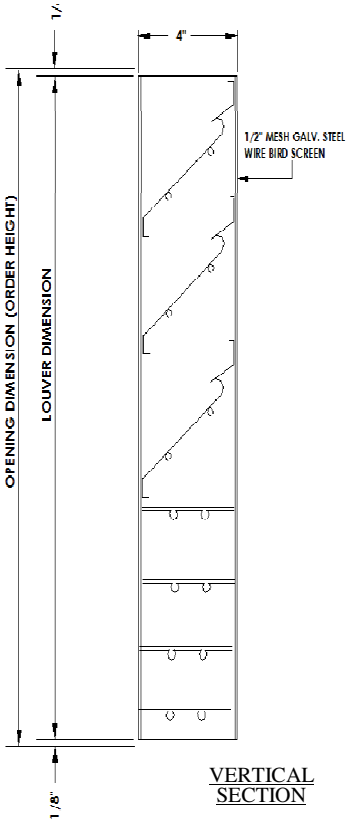

231 Commerce Dr. Montgomeryville, PA 18936
Tel: 215-412-4445 Fax: 215-412-4409
Email: lloydind@firedamper.com

138 Industrial Loop West, Orange Park, FL 32073
Tel: 904-541-1655 Fax: 904-541-1657
Email: lloydind1@firedamper.com

B1, 4/F., Luen Ming Hing Factory Building
36 Mok Cheong St.,
To Kwa Wan, Kowloon, H. K.
Tel: 852-2760-4188 Fax: 852-2760-4177
Email: tatanlexyim@lloydasia.com

Website: www.firedamper.com

*ALL STATED SPECIFICATIONS ARE SUBJECT TO UPDATE WITHOUT NOTICE OR OBLIGATION.

Lloyd Industries Inc. 2017